Steriliser

SF260

Safer than disinfection, hot-air sterilisation of containers and instruments

The indispensable safety feature for this hot air steriliser: Setpoint Wait. This means that the programme for sterilisation only starts when the set temperature has been reached. This feature can also be used with freely positionable Pt100 temperature sensors. Here the sterilisation time only begins when the set temperature has been reached at all measurement points, and reliable sterilisation is guaranteed at all times.
On this page, you can find all the essential technical data on the Memmert hot air steriliser. Our customer relations team will be pleased to help if you want further information. If you should require a customised special solution, please contact our technical specialists at myAtmoSAFE@memmert.com.

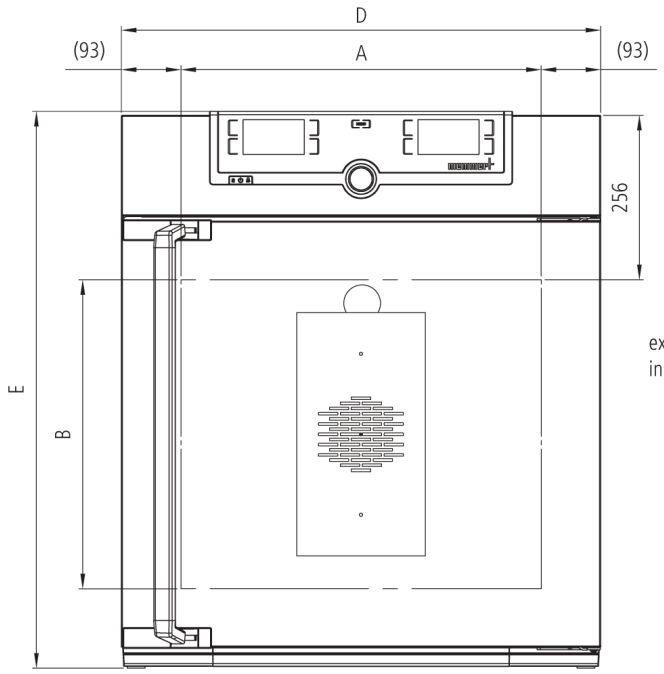

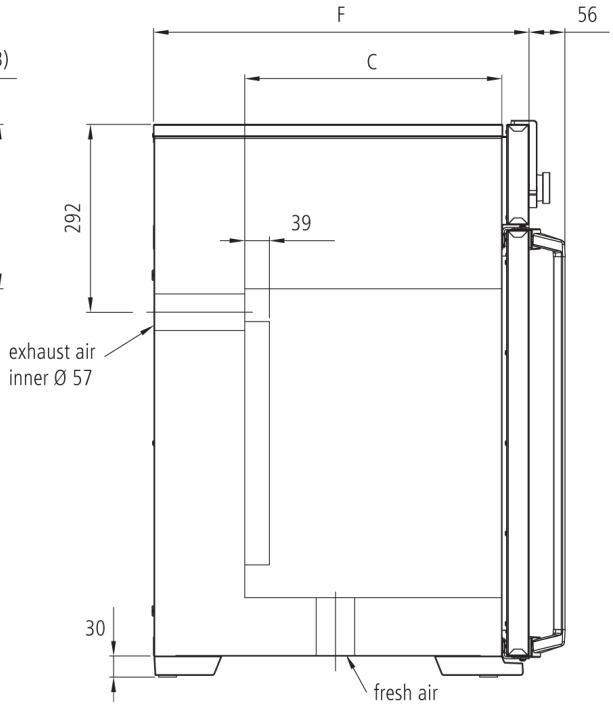

Temperature

Setting temperature range	+20 to +250 °C
Working temperature range	at least 10 above ambient temperature to +250°C
Temperature sensor	1 Pt100 sensor DIN class A in 4-wire-circuit

Control technology

Language setting	German, English, Spanish, French, Polish, Czech, Hungarian
ControlCOCKPIT	SingleDISPLAY. Adaptive multifunctional digital PID-microprocessor controller with high-definition TFT-colour display
Timer	Digital backwards counter with target time setting, adjustable from 1 minute to 99 days
Function SetpointWAIT	the process time does not start until the set temperature is reached
Calibration	three freely selectable temperature values
adjustable parameters	temperature (Celsius or Fahrenheit), fan speed, air flap position, programme time, time zones, summertime/wintertime

Ventilation

Fan	forced air circulation by quiet air turbine, adjustable in 10 % steps
Fresh air	Admixture of pre-heated fresh air by electronically adjustable air flap
Vent	vent connection with restrictor flap

Communication

Documentation	programme stored in case of power failure
Programming	AtmoCONTROL software for reading out, managing and organising the data logger via Ethernet interface (temporary trial version can be downloaded). USB stick with AtmoCONTROL software available as accessory (on demand).

Safety

Temperature control	adjustable electronic overtemperature monitor and mechanical temperature limiter TB, protection class 1 according to DIN 12880 to switch off the heating approx. 20°C above nominal temperature
Autodiagnostic system	for fault analysis

Standard equipment

Door	fully insulated stainless steel door with 2-point locking (compression door lock)
Internals	2 stainless steel grid(s), electropolished
Works calibration certificate	Calibration at +160°C

Stainless steel interior

Dimensions	$w_{(A)}$ x $h_{(B)}$ x $d_{(C)}$: 640 x 800 x 500 mm (d less 39 mm for fan)
Interior	easy-to-clean interior,made of stainless steel, reinforced by deep drawn ribbing with integrated and protected large-area heating on four sides
Volume	256 l
Max. number of internals	9
Max. loading of chamber	300 kg
Max. loading per internal	20 kg

Textured stainless steel casing

Dimensions	$w_{(D)}$ x $h_{(E)}$ x $d_{(F)}$: 824 x 1183 x 684 mm (d +2x56mm door handle)
Housing	rear zinc-plated steel

Electrical data

Voltage **Electrical load**	230 V, 50/60 Hz approx. 3400 W
Voltage **Electrical load**	115 V, 50/60 Hz approx. 1800 W

Ambient conditions

Set Up	The distance between the wall and the rear of the appliance must be at least 15 cm. The clearance from the ceiling must not be less than 20 cm and the side clearance from walls or nearby appliances must not be less than 5 cm.
Altitude of installation	max. 2,000 m above sea level
Ambient temperature	+5 °C to +40 °C
Humidity rh	max. 80 %, non-condensing
Overvoltage category	II
Pollution degree	2

Packing/shipping data

Transport information	The appliances must be transported upright
Customs tariff number	8419 8998
Country of origin	Federal Republic of Germany
WEEE-Reg.-No.	DE 66812464
Dimensions approx incl. carton	w x h x d: 930 x 1380 x 930 mm
Net weight	approx. 110 kg
Gross weight carton	approx. 161 kg

Standard units are safety-approved and bear the test marks

Memmert GmbH + Co. KG | Tel. +49 (0) 9122/925-0 | E-Mail info@memmert.com